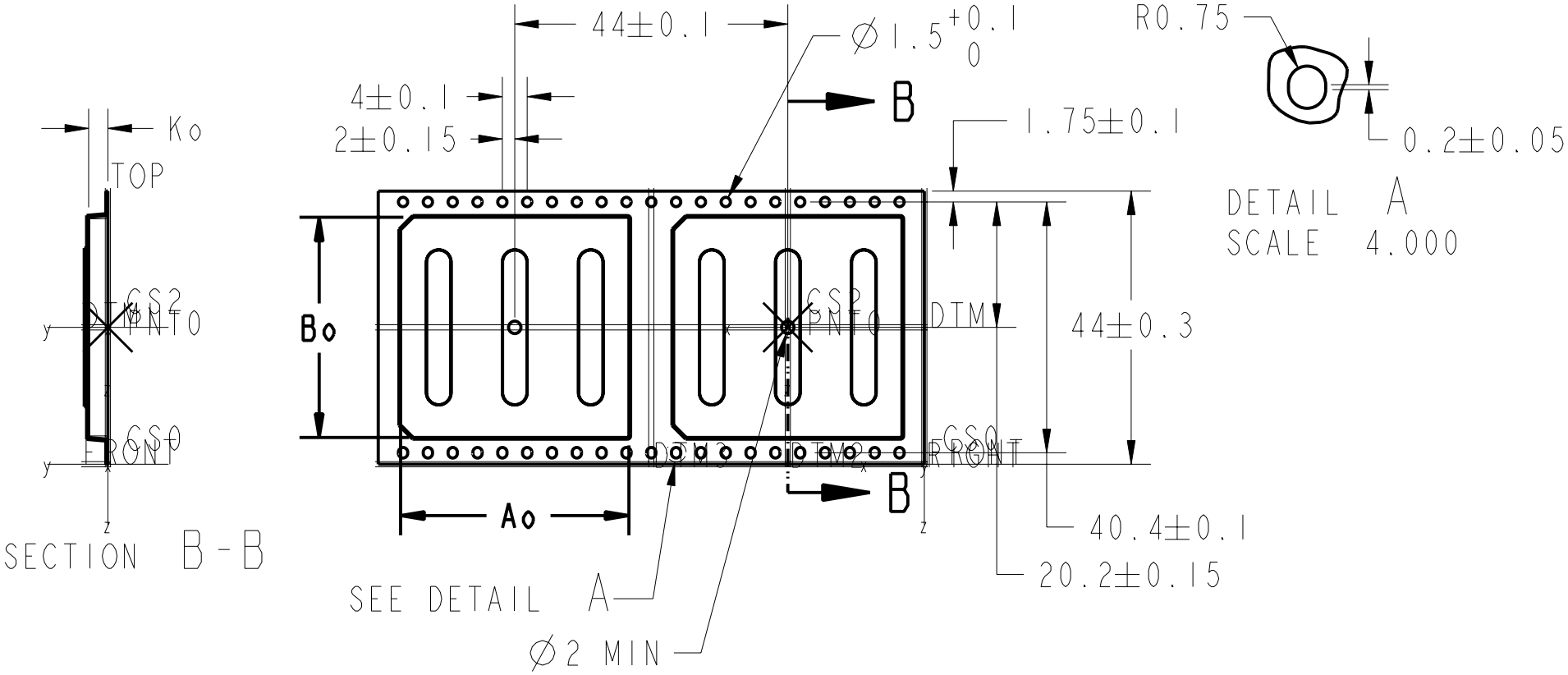

NOTES:
1. EIA-481 STANDARDS APPLY
2. POCKET POSITION RELATIVE TO SPROCKET HOLE MEASURED AS TRUE POSITION OF POCKET, NOT POCKET HOLE
3. DIE # WD20413

Ao	36.79 [1.448]
Bo	35.48 [1.397]
Ko	3.10 [.122]

TOLERANCES UNLESS OTHERWISE SPECIFIED	DRAWN BY K. WAGNER	DATE 19-Nov-02
±	CHECKED BY .	DATE .
±	DESIGNED BY .	DATE .
±	APPROVED BY .	DATE .
±	--- CONFIDENTIALITY --- THIS DRAWING IS HEREBY DESIGNATED AS CONFIDENTIAL. INFORMATION ON IT IS PROPRIETARY Accutech AND SHALL NOT BE USED OR DISCLOSED TO THIRD PERSONS EXCEPT IN CONFORMITY WITH Accutech WRITTEN CONSENT.	
DRAFT UNLESS NOTED: 0.5°		
∡ ± 0.5°		
ALL DIMENSIONS ARE IN MM	UNLESS OTHERWISE NOTED: ALL DIMENSIONS AND TOLERANCES PER ASME Y14.5M-1994 AND Accutech DRAFTING STANDARD NO. 1.0000.	
SCALE: NTS		
1 SHEET OF 1		

Accu-Tech Plastics

THIRD ANGLE PROJECTION

TITLE/DESCRIPTION: TAPE - CARR 50-212 44mm

PART NO./I.D. NO.: CT-9944H-124

MATERIAL/MOLD NO.: STATIC DISSIPATIVE POLYSTYRENE

DRAWING NO.: 01-019570

A SIZE

APPD. BY

X-240

ECO NO.

REV. A