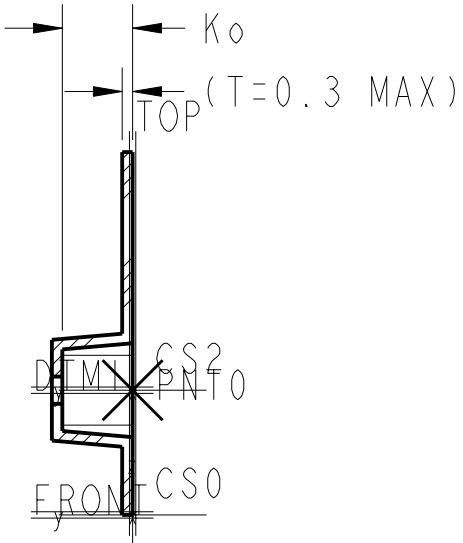


**SECTION B-B**

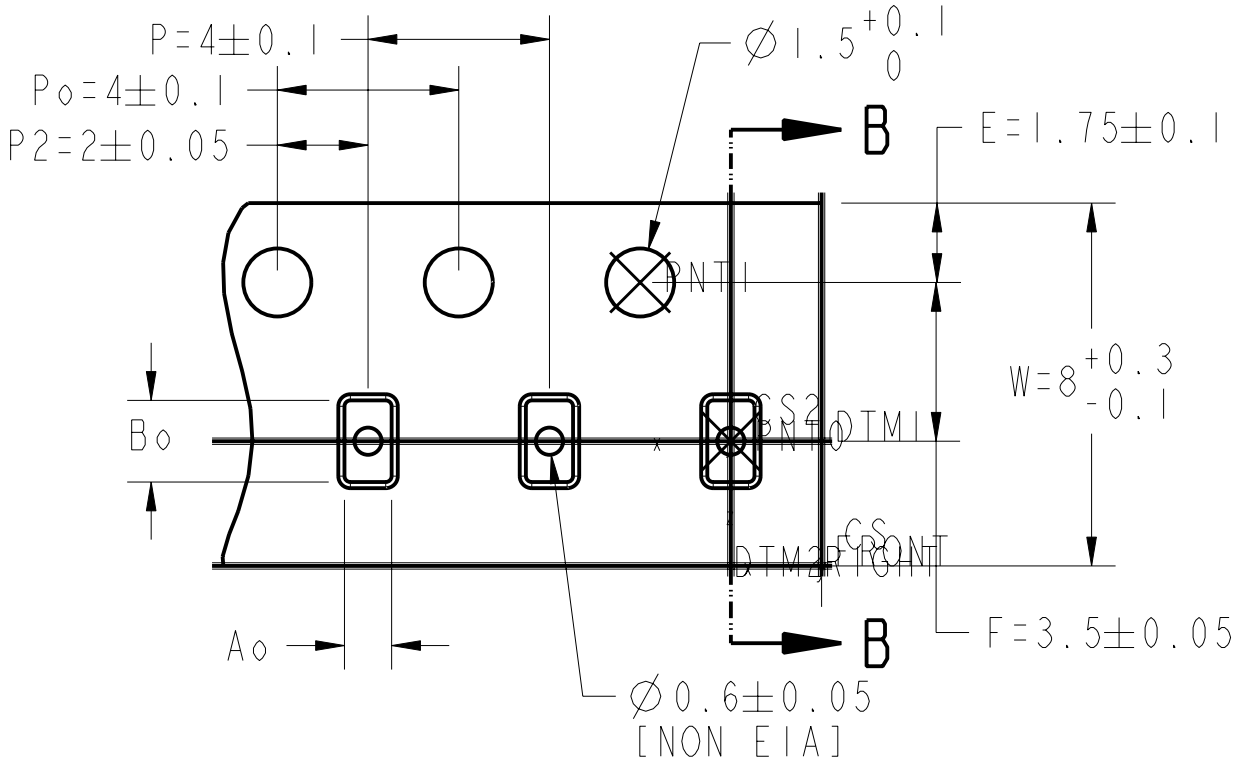


NOTES:

1. EIA-481 STANDARDS APPLY, EXCEPT WHERE NOTED
2. POCKET POSITION RELATIVE TO SPROCKET HOLE MEASURED AS TRUE POSITION OF POCKET, NOT POCKET HOLE
3. P10=Po X 10

4. NUMBER IDENTIFIES PRODUCT CONFIGURATION. FOR COMPLETE ORDER NUMBER TO INCLUDE MATERIAL TYPE AND QUANTITY PER REEL, CONTACT CUSTOMER SERVICE.

| | |
|---|---|
| Ao | 1.04±0.10 [0.041±.004] |
| Bo | 1.80±0.10 [0.071±.004] |
| Ko | 1.55±0.10 [0.061±.004] |

**IMPORTANT NOTICE:**

DRAWING DOES NOT CONTAIN ALL DIMENSIONS, SPECIFICATIONS, AND TOLERANCES. THIS DRAWING IS INTENDED TO ASSIST THE CUSTOMER IN DESIGNING AN INTERFACE MODULE BETWEEN THE CUSTOMER'S EQUIPMENT AND Accutech PRODUCT/EQUIPMENT. ALL DIMENSIONS AND TOLERANCES IF DEFINED ARE PER ASME Y14.5M - 1994

NOTE: ALL DIMENSIONS ARE CONSIDERED CRITICAL.

| ALL DIMENSIONS ARE IN MILLIMETERS [INCHES] | DRAWN BY | DATE |
|---|---|---|
| | K. ANDERSON | 07-Jul-04 |
| DO NOT SCALE | SHEET 1 OF 1 | |

Accu-Tech Plastics

THIRD ANGLE PROJECTION

DESCRIPTION: TAPE - 0605 - 061 8mm

PART NO.: CT00376 4

MATERIAL: SEE NOTE 4.

DRAWING NO.: 01-027791

A SIZE

X-9612 ECO NO.

REV. B