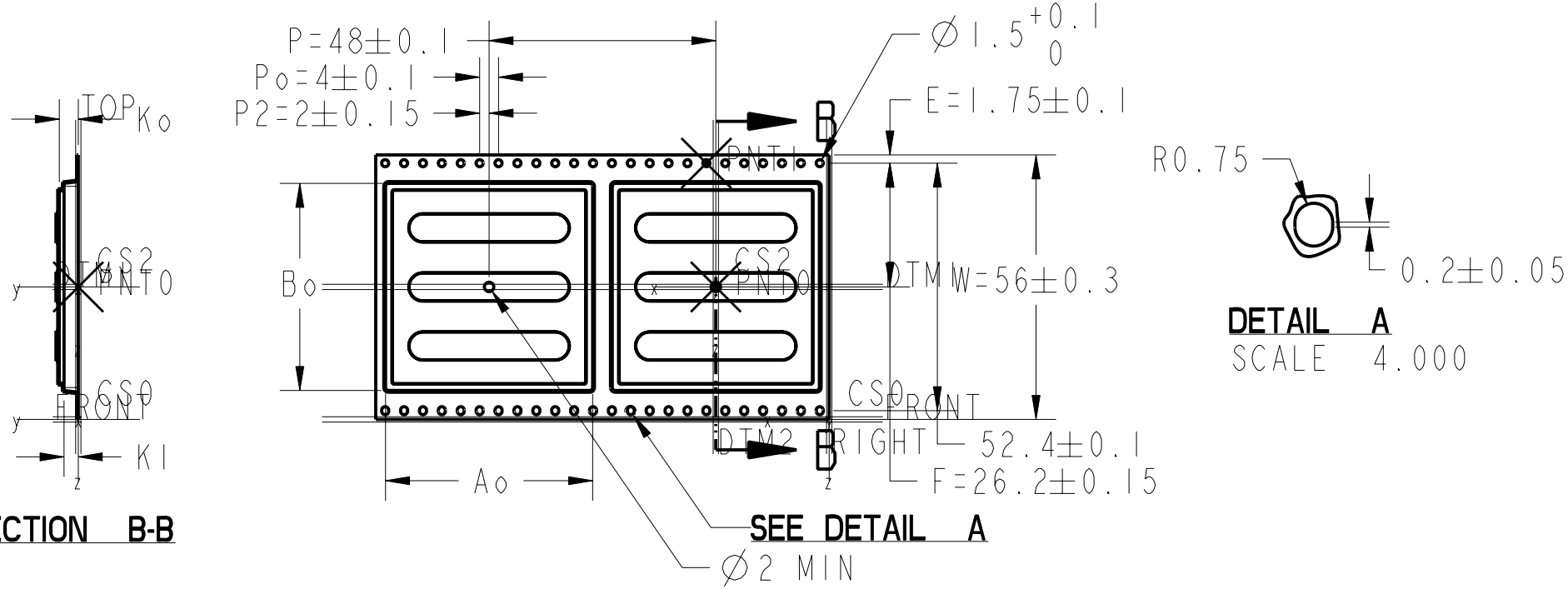

NOTES:

1. EIA-481 STANDARDS APPLY
2. POCKET POSITION RELATIVE TO SPROCKET HOLE MEASURED AS TRUE POSITION OF POCKET, NOT POCKET HOLE
3. P10=Po X 10
4. DIE # WD20544
5. NUMBER IDENTIFIES PRODUCT CONFIGURATION. FOR COMPLETE ORDER NUMBER TO INCLUDE MATERIAL TYPE AND QUANTITY PER REEL, CONTACT CUSTOMER SERVICE.

Ao	43.85 [1.726]
Bo	43.85 [1.726]
Ko	4.02 [0.158]
K1	3.02 [0.119]

IMPORTANT NOTICE:

DRAWING DOES NOT CONTAIN ALL DIMENSIONS, SPECIFICATIONS, AND TOLERANCES. THIS DRAWING IS INTENDED TO ASSIST THE CUSTOMER IN DESIGNING AN INTERFACE MODULE BETWEEN THE CUSTOMER'S EQUIPMENT AND Accutech PRODUCT/EQUIPMENT. ALL DIMENSIONS AND TOLERANCES IF DEFINED ARE PER ASME Y14.5M - 1994

NOTE: ALL DIMENSIONS ARE CONSIDERED CRITICAL.

ALL DIMENSIONS ARE IN MILLIMETERS [INCHES]	DRAWN BY	DATE
	K. ANDERSON	08-Mar-04
DO NOT SCALE	SHEET 1 OF 1	

Accu-Tech Plastics

THIRD ANGLE PROJECTION

DESCRIPTION: TAPE - CARR 7602-1284-1TRM 56mm

PART NO.: CT00388 5

MATERIAL: SEE NOTE 5.

DRAWING NO.: 01-026468

A SIZE

X-7065

ECO NO.

REV. A